REVISION HISTORY			
REV	DESCRIPTION	DATE	APPROVED
A	INITIAL RELEASE		

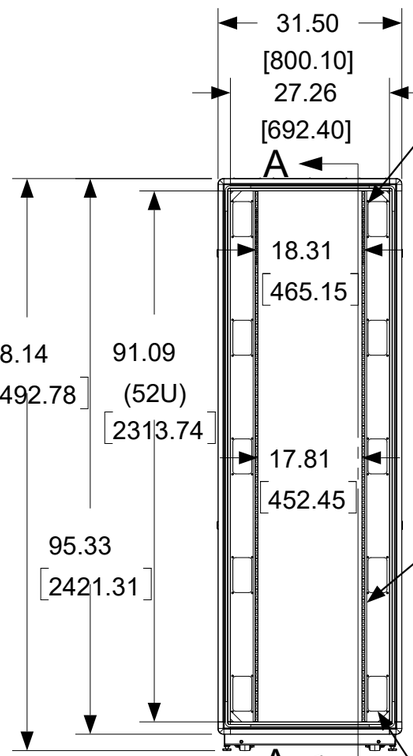

FRONT VIEW
(DOORS REMOVED FOR CLARITY)

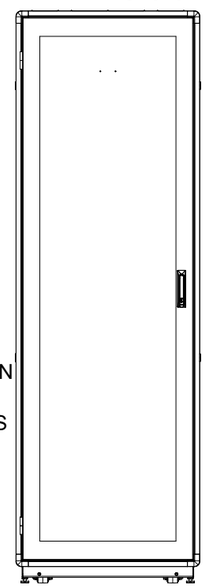

FRONT VIEW
(4) RAILS W/ (4) 3.25" X 6" CABLE ACCESS HOLES & COVER PLATES EACH

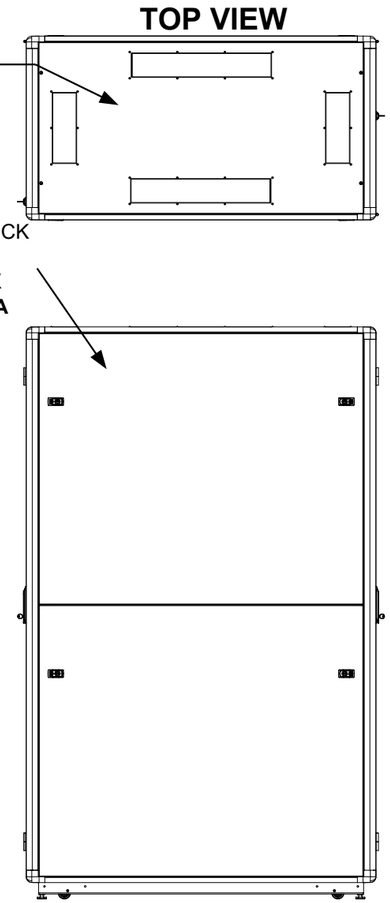

TOP VIEW

RIGHT SIDE VIEW

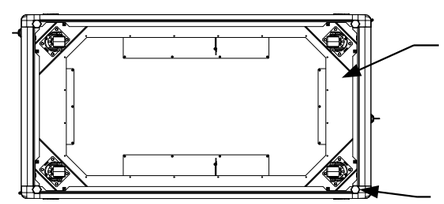

BOTTOM VIEW

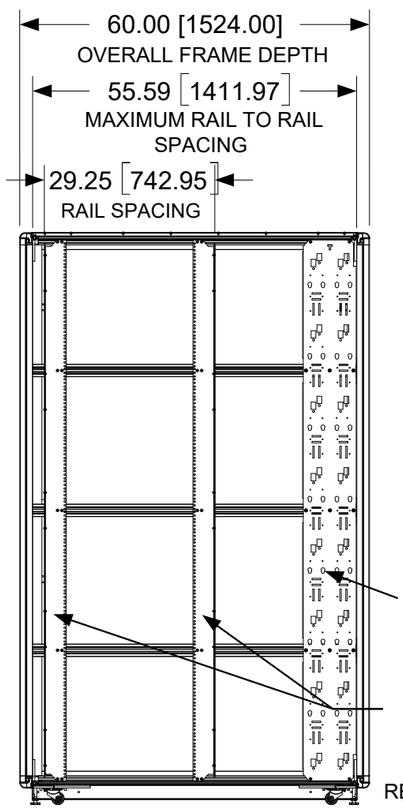

A-A SIDE SECTION VIEW

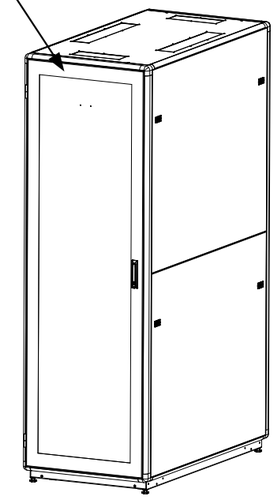

FRONT VIEW

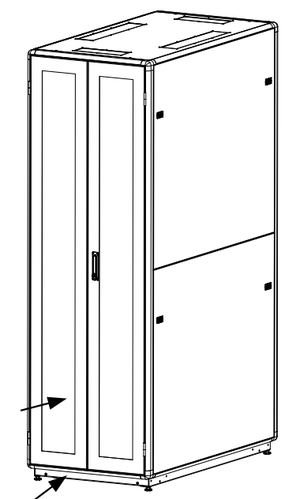

REAR VIEW

SOLID TOP W/ (2) 4" X 12" & (2) 4" X 24" CABLE ACCESS HOLES & COVER PLATES
ST2757-4CA

3/8" SQUARE MOUNTING HOLES 19" EIA 310-D COMPLIANT

SPLIT LOCKING QUICK RELEASE SIDE PANELS - TYP. 4X
SP9157-SPL-EMKA

U-LABELS ON FRONT & REAR RAILS

FRONT HEX PERF DOOR W/ LOCKING HANDLE AND LIFT OFF HINGES
SPD9127-HTC

LACING PANELS CAN FIT UP TO 4X PDUS EACH - TYP. 2X
LP91-DW

2 PAIR FULLY ADJUSTABLE VERTICAL SQUARE HOLE MOUNTING RAILS

REAR DOUBLE HEX PERF DOOR W/ LOCKING SWING HANDLE AND LIFT OFF HINGES
SPD9127-DBL-HTC

HD CASTER BASE HAS MOUNTING PROVISIONS FOR FLOOR MOUNT BRACKET (SOLD SEPERATELY)

HD CASTER BASE W/OPEN BOTTOM

4X LEVELERS

CUSTOM CONFIGURATIONS AVAILABLE UPON REQUEST

These drawings and specifications are the exclusive property of Martin International Enclosures, LLC and shall not be copied, reproduced or used for any purpose at all without prior written permission of Martin International Enclosures, Inc. (MIE) except to manufacture for MIE, LLC. the items on the drawings. These drawings are issued in strict confidence.

CABINET SPECIFICATIONS

1. **DYNAMIC WEIGHT LOAD:** 4,000LBS
2. **STATIC WEIGHT LOAD:** 5,000 LBS
3. **CABINET DIMENSIONS:** 98.14"H X 31.50"W X 60.00"D
4. **CABINET WEIGHT:** 640 LBS.
5. **SHIPPING WEIGHT & DIMENSIONS:** 675 LBS., 106"H X 37"W X 67"D
6. **FINISH:** POWDERCOAT (STANDARD & CUSTOM COLORS AVAILABLE)
7. **MATERIAL:** FRAME - 6063 ALUMINUM EXTRUSION, PANELS - 18GA GALV., DOORS - 16GA GALV., BASE/RAILS - 12GA GALV.
8. **HARDWARE:** PACK OF 40 EACH - M6 X 20MM PHILLIPS PAN HEAD SCREWS, M6 CAGE NUTS, M6 FLAT POLYCARBONATE WASHERS

MADE IN USA

MATERIAL

TOLERANCES EXCEPT AS NOTED
DECIMAL
.X = +/- .060
.XX = +/- .030
.XXX = +/- .010
ANGULAR
+/- 1/2 DEG

martin INTERNATIONAL ENCLOSURES

PART NAME
52U MHD SERIES RACK, 27" WIDE, 57" DEEP

SIZE	DATE	PART #	REV
B	11-26-25	MHD912757	A

PROGRAM#	DATE	DRAWN BY: TL	
NEXT UPPER ASSEMBLY:	SETBACK=	DATE	APPROVED BY:

SCALE = 1/26 | FINISH: A/R | SHEET 1 OF 1