REVISION HISTORY			
REV	DESCRIPTION	DATE	APPROVED
A	INITIAL RELEASE		

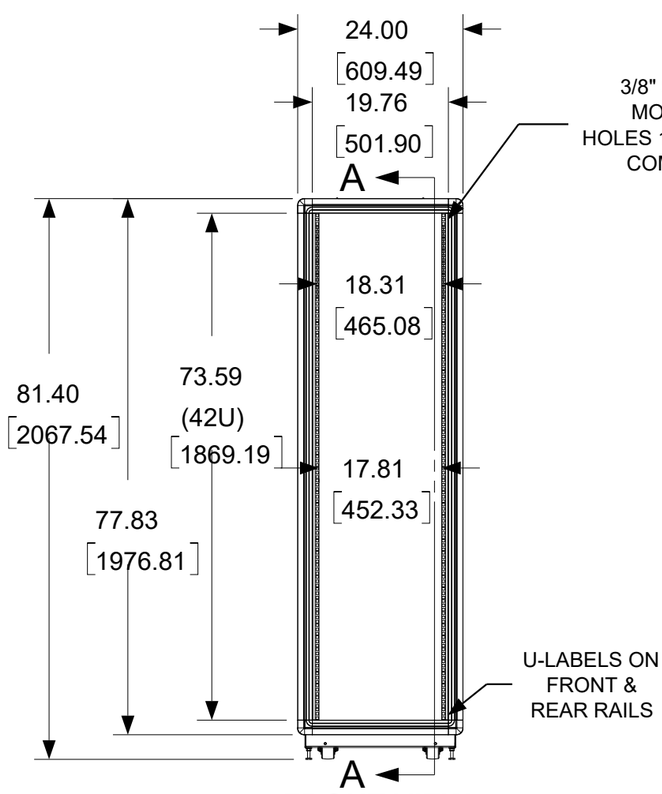

FRONT VIEW
(DOORS REMOVED FOR CLARITY)

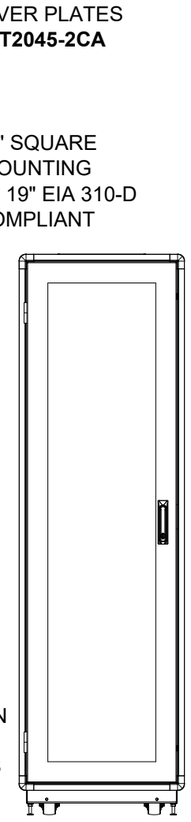

FRONT VIEW

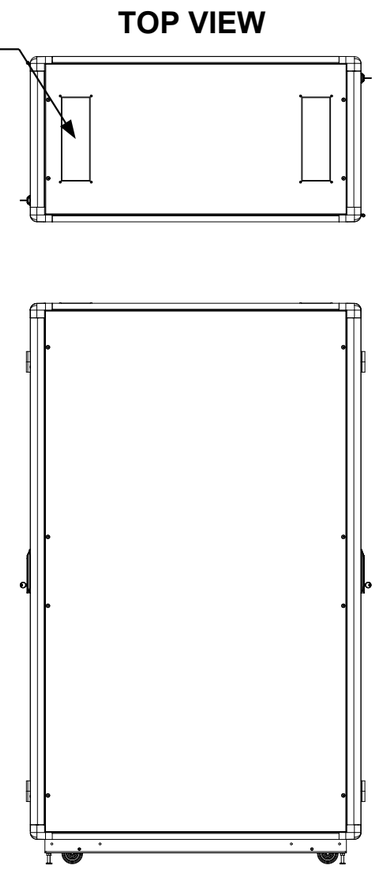

TOP VIEW

RIGHT SIDE VIEW

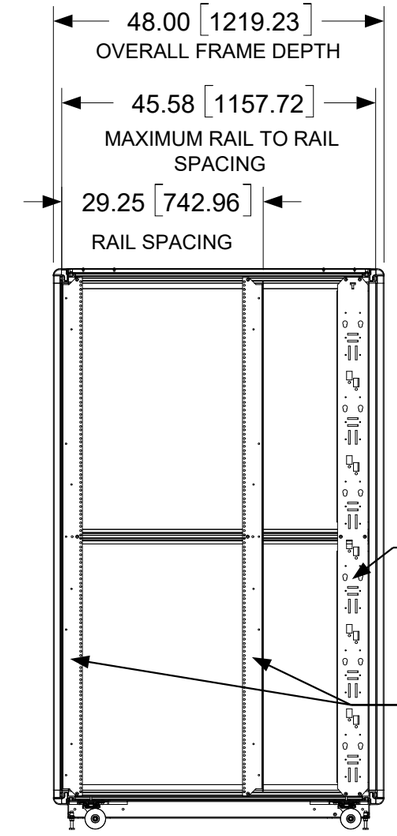

A-A SIDE SECTION VIEW

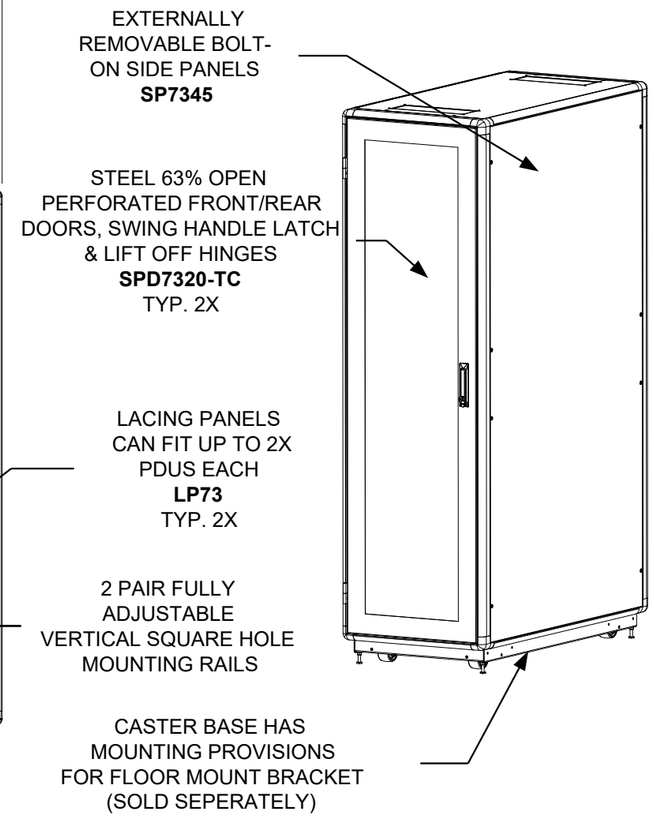

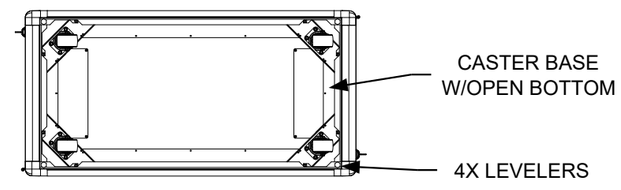

BOTTOM VIEW

CABINET SPECIFICATIONS

- **DYNAMIC WEIGHT LOAD:** 2,000LBS (HD VERSIONS AVAILABLE ON REQUEST)
- **STATIC WEIGHT LOAD:** 3,000 LBS (HD VERSIONS AVAILABLE ON REQUEST
- **CABINET DIMENSIONS:** 81.40"H X 24.00W X 48.00"D
- **CABINET WEIGHT:** 340 LBS.
- **SHIPPING WEIGHT & DIMENSIONS:** 375 LBS., 88"H X 30"W X 55"D
- **FINISH:** POWDERCOAT (STANDARD & CUSTOM COLORS AVAILABLE)
- **MATERIAL:** FRAME - 6063 ALUMINUM EXTRUSION, PANELS - 18GA GALV., DOORS - 16GA GALV., BASE/RAILS - 12GA GALV.
- **HARDWARE:** PACK OF 40 EACH - M6 X 20MM PHILLIPS PAN HEAD SCREWS, M6 CAGE NUTS, M6 FLAT POLYCARBONATE WASHERS

CUSTOM CONFIGURATIONS AVAILABLE UPON REQUEST

These drawings and specifications are the exclusive property of Martin International Enclosures, LLC and shall not be copied, reproduced or used for any purpose at all without prior written permission of Martin International Enclosures, Inc. (MIE) except to manufacture for MIE, LLC. the items on the drawings. These drawings are issued in strict confidence.

MADE IN USA

MATERIAL		martin INTERNATIONAL ENCLOSURES	
TOLERANCES EXCEPT AS NOTED DECIMAL .X = +/- .060 .XX = +/- .030 .XXX = +/- .010 ANGULAR +/- 1/2 DEG		PART NAME: 42U MSR SERIES RACK, 20" WIDE, 45" DEEP	
PROGRAM#	DATE	DRAWN BY: JQ	SIZE: B / DATE: 9/19/25 / PART #: MSR732045 / REV: A
NEXT UPPER ASSEMBLY:	SETBACK= / DATE	APPROVED BY:	SCALE = 1/22 / FINISH: A/R / SHEET 1 OF 1